Applications


Hospitality

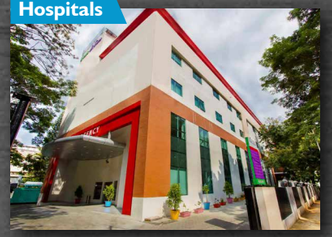
Hospitals



Industrial/Commercial


Educational Institutions


Workspaces


Resorts

Service Excellence

A. O. Smith comes with the assurance of the highest quality of service. We have a vast network to cater to varying industries, ranging from Hotels, Hospitals, Manufacturing units, Airports and High-end villas across the country.

Our 4-step Service Support Approach

1

Sizing and Selection,
we consult our clients and provide technical support

2

Training Support for Channel Partners
by A. O. Smith experts

3

Regional Service Team
are dedicated for each zone

4

Central Service Team at HO
supports with training & technical queries

All service cases are monitored by the regional sales team as well, thus ensuring the most cogent and beneficial after-sales support resulting in highest level of clientele satisfaction.

Registered Office

A. O. Smith India Water Products Private Limited

Plot No. 300, Phase-2, KIADB Industrial Area, Harohalli, Kanakapura Taluk, Ramanagara District - 562 112, Karnataka, India.
Customer Care No. 1860-500-2468 ■ Website: www.aosmithindia.com
CIN: U31909KA2006PTC040282

A. O. Smith
Innovation has a name.

A. O. Smith 150 years of innovation
Since 1874

Our Heat Pumps Think!

Discover the Intelligent Adaptive Technology.



AES
INTELLIGENT
ADAPTIVE
TECHNOLOGY

HPA Series

Air to Water Heat Pump

Storage Capacity - 200L, 300L & 450L

HPA

Presenting the HPA Series - Smartly designed to give a premium hot water bathing experience with the new age heat pump technology. It is designed to be suitable for Hotels, Resorts/Villas. With the pathbreaking technology, that pulls heat from the environment, it is no surprise that our heat pumps reduce the water heating costs by more than 70%, reducing greenhouse emissions drastically.

A. O. Smith Advantage

Smarter way to heat water



- **AES Technology** – Intelligent Adaptive Energy Saving technology analyses the water usage patterns to automatically heat up the water and optimize energy consumption
- **Wired Digital Control** – Smarter way to control heating
- **Smart Modes** – Enables you to customize as per your need. Three modes - Efficiency, Hybrid and Electric

Sensitive to the environment



- **Heating that saves energy** – Reduced energy consumption Up to 70% by extracting heat from the atmosphere to heat up the water
- **R134a Green Refrigerant** – Controls the greenhouse gas emission, thus contributing to a greener world

Absolutely safe for you



- **7 Safety Protection**
- High and Low voltage protection
- High temperature limit protection switch (Eco switch)
- High water temperature protection (Temperature sensor)
- Refrigerant leakage protection
- Compressor overheating discharge protection
- Abnormal operation Protection (Relay and Electronic expansion valve)
- Temperature and pressure relief valve

External Dimensions

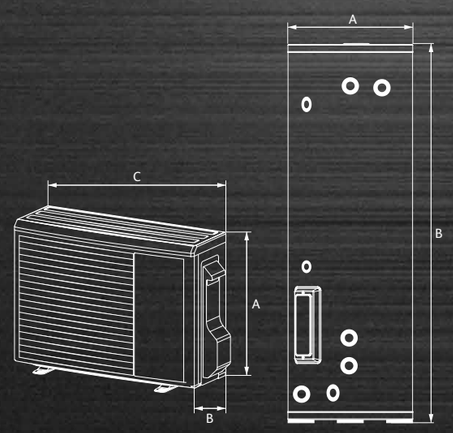

Digital Remote



HPA

Technical Specification

MODEL		HPA-50D1.5Z	HPA-80C1.5A	HPA-120D2.0A
Rated volume [L]		200	300	450
Voltagene / Frequency [V/Hz]		220~ / 50	220~ / 50	220~ / 50
Rated Input / Current [W/A]				
Efficiency Mode		830/3.8	1010/4.6	1380/6.5
Hybrid Turbo Mode		2830	2010/9.1	2380/11
Output(W)COP		4.4	3.6	4.2
Efficiency Mode		3660	3640	5800
Hybrid Turbo Mode		5660	4640	6800
Water temperature range [°C]		35~75	35~75	35-75
Ambient temperature range for Efficiency [°C]		7~43	7~43	7~43
Tank rated pressure (bar)		10	10	10
External unit dimension	A [mm]	560	560	740
	B [mm]	320	320	350
	C [mm]	835	835	820
Tank dimension	A [mm]	Ø520	Ø610	Ø710
	B [mm]	1595	1640	1660
Weight of external unit (kg)		39	37	55
Weight of tank (kg)		69	98	133
Refrigerant/Quantity		R134a/1110(g)	R134a/940(g)	R134a/1400(g)

